Early Booklet E.C.:	**+ 1**
Unit 3.C Hwk. Pts.:	**/ 36**
Unit 3.C Lab Pts.:	**/ 50**
Late, Incomplete, No Work, No Units **Fees**?	Y / N

Unit 3.C – Electrical Theory, Circuits

Essential Fundamentals of Electrical Theory, Circuits

1. When batteries are connected in series (assuming correct polarity), the total voltage is the sum of individual battery voltage.
2. When batteries are connected in parallel, total voltage equals the voltage of the highest battery.
3. In a parallel resistor circuit, equivalent resistance is always less than the lowest resistor.
4. In an RC circuit, a charging capacitor's voltage increases logarithmically, theoretically equaling battery voltage only after an infinite number of time constants have elapsed.
5. The sum of voltage drops across resistors in series equals the supply voltage.
6. All parallel branches of a circuit (resistor or capacitor) have the same voltage drop.
7. Resistance is a quantity governed by many factors, but resistivity is a material property of matter only changed by temperature.

Equation Sandbox

In Unit 3.C, some of the following equations will be used. Practice isolating variables to prepare for it.

AP Equations

In-Class Equations

Current Definition: $I = \frac{\Delta Q}{\Delta t}$, $\Delta Q =$, $\Delta t =$

Resistance Definition: $R = \frac{\rho \ell}{A}$, $A =$, $\rho =$, $\ell =$

Power Equation: $P = I \Delta V$, $I =$, $\Delta V =$

Ohm's Law: $I = \frac{\Delta V}{R}$, $R =$, $\Delta V =$

Time Constant: $\tau = RC$, $R =$, $C =$

RC Circuit Current: $I = I_0 e^{-t/\tau}$, $t =$, $\tau =$, $I_0 =$

Series Resistance: $R_s = R_1 + R_2 + R_3 + \ldots$, $R_1 =$

Parallel Resistance: $R_p = \left(R_1^{-1} + R_2^{-1} + R_3^{-1} + \ldots\right)^{-1}$, $R_1 =$

Charging Capacitor: $V_C = V_0[1 - e^{-t/\tau}]$, $t =$, $\tau =$, $V_0 =$

Discharging Capacitor: $V_C = V_0 e^{-t/\tau}$, $t =$, $\tau =$, $V_0 =$

Resistivity vs. Temperature: $\rho = \rho_0 (1 + \alpha \Delta T)$, $\Delta T =$, $\rho_0 =$

Resistance vs. Temperature: $R = R_0 (1 + \alpha \Delta T)$, $\Delta T =$, $R_0 =$

Possible 3.C.1 Pts.: 7
Late, Incomplete, No work, No Units Fee: - 1 - 2 - 3
Final Score: / 7

3.C.1 Problems – Batteries, Direct Current & the Ampere

Section 17.1 & 17.2 of your textbook.

1. Two 6-V batteries and one 12-V battery are connected in series.
   A. What is the voltage over this arrangement? Make a drawing of this battery circuit.

   B. What arrangement of these three batteries would give a total voltage of 12-V? Make a drawing of your battery circuit.

2. A net charge of 35 C passes through a wire in 2.0 minutes. What is the current?

3. A toy car draws a 0.50-mA of current from a 3.0-V battery in 12 minutes. How much charge flowed through the toy car?

4. A total charge of 16 C passes a location in a wire in 1.25 minutes. How long does 35 C of charge take to pass that location if the current is doubled?

5. Car batteries are often rated in 'ampere-hours' or A•h.
   A. A fully charged, heavy duty battery is rated at 162 A•h and can deliver a current of 6.0 A steadily until depleted. What is the maximum time this battery can deliver this current, assuming it isn't recharged?

   B. How much charge will the battery deliver in this time?

Possible 3.C.2 Pts.: 6
Late, Incomplete, No work, No Units Fee: - 1 - 2
Final Score: / 6

3.C.2 Problems – Resistance & Resistor Circuits

Section 17.3 & 18.1 of your textbook.

1. The wire in a heating element of an electric stove burner has a 0.85-m effective length and a 2.5 E -6 m^2 cross sectional area.
   A. What is its resistance when the stove is off?

   B. If the wire is made of iron and operates at 410 $^{\circ}$C, what is its resistance at that temperature?

2. A material has a resistance of 18 Ω. What is the resistance if the length is doubled, and the cross sectional area is tripled? Assume the same temperature for both samples.

3. Two identical resistors (R) are connected in parallel and then wired in series to a 50-Ω resistor. If the total equivalent resistance is 75 Ω, what is the value of R?

4. What is the resistance between points A and B?

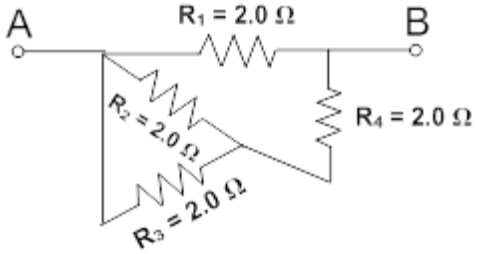

5. What is the total resistance of the following circuit?

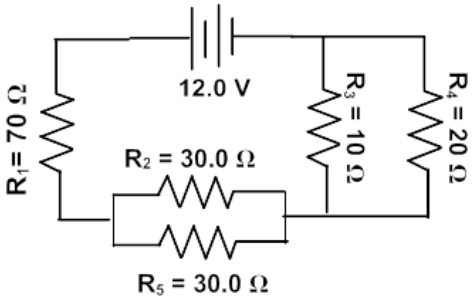

Possible 3.C.3 Pts.: 8
Late, Incomplete, No work, No Units Fee: - 1 - 2 - 3
Final Score: / 8

3.C.3 Problems – Ohm's Law

Section 17.3 of your textbook.

1. What terminal voltage (voltage measured across the terminals) must an ideal battery (no internal resistance) have to produce a 0.50-A current through a 3.0 Ω resistor?

2. A battery labeled 18.0 V supplies 1.70 A to a 7.50-Ω resistor.
   A. What is the terminal voltage of the battery?

   B. What is its internal resistance?

3. A 12.0 V battery supplies a current of 2.8 A to a circuit. What's the resistance in the circuit?

4. What current would flow through a circuit with a resistance of 92 Ω, if it were hooked up to a 120 V AC voltage source?

5. Suppose that the resistor arrangement in the following diagram is connected to a 12-V battery.
   A. What is the current through each resistor?

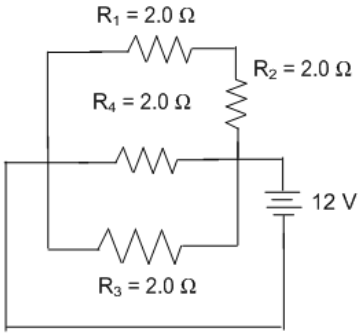

   B. What is the voltage drop across each resistor?

6. Draw any parallel resistor circuit with at least two resistors that allows 1.0 A to flow with a 1.5 V battery powering it.

Possible 3.C.4 Pts.: 7
Late, Incomplete, No work, No Units Fee: - 1 - 2 - 3
Final Score: / 7

3.C.4 Problems – Power
Section 17.4 of your textbook.

1. A DVD player is rated at 50.0 W at 120 V. What is its resistance?

2. The current in a refrigerator with a resistance of 12 Ω is 9.0 A. What is the power delivered to the refrigerator?

3. A resistor in a circuit is designed to operate at 120 V.
   A. If you connect the resistor to a 60-V power source, will the resistor dissipate heat at (1) 2, (2) 4, (3) ½, or (4) ¼ times the designed power? Why?

   B. If the designed power is 90 W at 120 V, but the resistor is connected to a 30-V power supply, what is the power delivered to the resistor?

4. A 120-V air conditioner unit draws 12 A of current. If it operates for 25.0 minutes:
   A. How much energy in kilowatt-hours does it use in that time?

   B. If the cost of electricity is $0.12/kWh, what is the cost of operating the unit for 25.0 minutes?

   C. If the air conditioner initially cost $425 and it is operated, on average, 4.0 h per day, how long does it take before the operating costs equal the price?

Possible 3.C.6 Pts.: 8
Late, Incomplete, No work, No Units Fee: - 1 - 2 -3
Final Score: / 8

3.C.5 Problems – RC Circuits
Section 18.3 of your textbook.

1. A 1.2 μF capacitor in a single-loop RC circuit with a 12V battery has a time constant of 1.5 seconds.
   A. What resistor is needed for that time constant?

   B. What is the percentage of the circuit's final voltage after 3.5 seconds?

   C. What amount of energy is stored when it's at 63.2% of its final voltage (one time constant)?

   D. At maximum voltage, how much electrical energy is stored in the capacitor?

2. In the figure, the switch closes at t = 0 and the capacitor charges.
   A. What is the voltage across the resistor and across the capacitor, expressed as fractions of V_o just after the switch is closed?

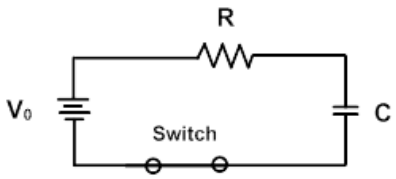

   B. What is it after two time constants have elapsed?

3. A series RC Circuit consisting of a 5.0 MΩ resistor and a 0.40 μF capacitor is connected to a 12.0 V battery. The capacitor is initially uncharged.
   A. What is the change in voltage across it between $t = 2\tau$ and $t = 4\tau$?

   B. By how much does the capacitor's stored energy change in the same time interval?

AP Physics 2	Unit 3.C.1 Lab - Resistor Circuit Challenge
Reminder: Update Table of Contents	Correction Credit: Half

Lab Overview:

Pretend that you're an electrical engineer, and you need an exact resistance for a circuit you're building, but you don't have that resistor in your kit.

You and your team (three students max.) will receive a set of resistors, and you must determine their resistance using the color coding system or a meter. Next, design, build, and test circuits that have three different resistances.

Resistor Challenge Lab (3.C.1) Guide		
Table of Contents, Title/Date, Complete Synopsis, Two Purposes, Legible		/ 2
Mission 1: Data Table	Table Present	/ 1
	Three Resistors	/ 2
Mission 2: Circuit Design	All Circuits Drawn	/ 2
	Resistance Calculated	/ 2
Mission 3: Circuit Analysis	Two Circuits Boxed	/ 2
	Resistance Measured	/ 2
Analysis 1: Percent Error		/ 1
Question 1: How did you determine the different configurations?		/ 2
Question 2: How close were values; what accounts for differences?		/ 2
Work Not Shown Fee:		-1 -2 -3
Late Lab Fee:		-3
Total:		**/ 18**

Materials List:

Solderless Breadboard
3 Resistors: 100 Ω, 470 Ω, 5600 Ω.
Jumper Wires
Ohmmeter

Mission 1: Data Table

Use the color codes on your three resistors to determine what each resistor value is – don't use a meter for this. Put this data in a table.

Mission 2: Circuit Design

Determine how many unique resistances are possible with the three resistors, by drawing each one with resistors labeled. Include the equivalent resistance of each circuit.

Mission 3: Circuit Analysis

Determine which two of the possible circuits have specific resistance values of 81Ω and 487 Ω. Go back to Mission 2 and draw a box around those two circuits.

Finally, build that circuit, and measure its actual resistance with the meter. Write your measured value by the circuit in Mission 2, label it 'measured resistance,' and draw a box around it.

Analysis:

1. Calculate the percent error between your theoretical (printed) resistance, and the measured resistance.

Questions: Rephrase and answer each in at least three complete sentences for full credit.

1. How did your team determine the configuration possibilities for your circuits?

2. Consider mission 3, and Analysis 1. How close were your theoretical vs. measured values, and what accounts for any disparities?

AP Physics 2	Unit 3.C.2 Lab - Mystery Resistor Challenge
Reminder: Update Table of Contents	Correction Credit: Half

Lab Overview:

You and your team will determine the resistance of unknown resistors using known resistors and a volt meter.

Mystery Resistor Lab (3.C.2) Guide		
Table of Contents, Title/Date, Complete Synopsis, Two Purposes, Legible		/ 2
Mission 1: 3 Resistors	Description in Lab Book	/ 3
	Circuit Diagram	/ 2
Analysis 1: Three Resistors' Values		/ 3
Question 1: What difficulties did you and your group encounter?		/ 2
Work Not Shown Fee:		-1 -2 -3
Late Lab Fee:		-2
Total:		**/ 12**

Materials List:

Selection of Mystery Resistors
Solderless Breadboard & Wires
6 V Dry Cell Battery
Known Resistors in kit:
- 100 Ω (brown-black-brown)
- 390 Ω (orange-white-brown)
- 470 Ω (yellow-purple-brown)
- 5,600 Ω (green-blue-red)
- 8,200 Ω (gray-red-red)
- 10,000 Ω (brown-black-orange)

Mission 1: Three Mystery Resistors

Choose three mystery resistors and one-at-a-time determine their resistance without the use of an ohmmeter. You are allowed to use the known resistors in the kit, and a meter set to measure voltage only. Hint: use the ratio method as outlined in the notes.

In your lab book, describe exactly how you figured out each resistance, and provide the data and calculations you used to do so.

Draw a circuit diagram supporting your resistor determination explanation.

Analysis:

1. Identify each mystery resistor by writing each unknown resistors' value in a box, along with its number (so I can check your value when I'm grading your lab).

Questions: **Rephrase and answer each in at least three complete sentences for full credit.**

1. What difficulties were encountered in determining resistance?

AP Physics 2	Unit 3.C.3 Lab - Resistor/Capacitor Circuits
Reminder: Update Table of Contents	Correction Credit: Half

Lab Overview:

You and your team will build a simple RC circuit, and determine the charging rate of a capacitor, based on voltage.

RC Circuit Lab (3.C.3) Guide		
Table of Contents, Title/Date, Complete Synopsis, Two Purposes, Legible		/ 2
Mission 1: Charging Rate	Data Table: Voltage vs. Time: 90 Seconds Min	/ 4
Analysis 1: Time constant calculation using components.		/ 2
Analysis 2: Time constant calculation using voltage data.		/ 2
Analysis 3: Graph	**Graph Present**	/ 2
	Labeled, Scaled, Neat	/ 4
Analysis 4: Percent error.		/ 2
Question 1: What accounts for differences in time constants?		/ 2
Work Not Shown Fee:		-1 -2 -3
Late Lab Fee:		-4
Total:		**/ 20**

Materials List:

Solderless Breadboard
6 V Dry Cell Battery
Switch
Jumper Wires
10,000 Ω Resistor (brown-black-orange)
One Big Capacitor
Multimeter set to Voltage

Mission 1: Charging Rate

Build the RC circuit shown here, with the resistor, a capacitor, **open** switch, and 6.0 V battery. Use a jumper wire to discharge the capacitor. The next part requires a bit of teamwork to achieve, since values will take more time to write than you have. Hook the voltmeter up in parallel across the capacitor as shown in the circuit diagram, then close the switch. Read the meter and record voltage data every five seconds for at least 90 seconds. Put your data in a table.

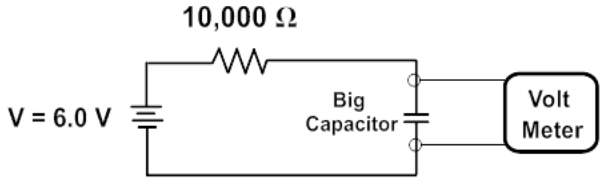

Analysis: Answer these completely in your Lab Books

1. Calculate the time constant (τ) for your circuit using the values of your capacitor and resistor

2. Calculate the time constant (τ), using one of the middle voltage and time values from your data table in Mission 1. You will have to algebraically shuffle tau out of the Charging Capacitor equation from the Equation Sandbox on the first page of this Unit.

3. Make a voltage vs. time graphs for your circuit. Be sure to label the axes, use an appropriate scale to give meaning to your graph, and make it tidy (spreadsheet program is suggested).

4. Considering the constant from Analysis 1 to be the accepted value, calculate the percent error between the two time constants from Analyses 1 & 2.

Questions: Rephrase and answer each in at least three complete sentences for full credit.

1. What could account for differences between the two time constants?

AP Physics 2	Unit 3.C - Current, Resistance, RC Circuits				
Application Problems, AP Test Preparation Questions					
Presentation Points:	/ 5	Late Fee:	-2	Completion (Booklet Check)	/ 5

Your grade on this problem set depends on the presentation you provide for your assigned problems, and whether **all** problems are complete when you submit your Booklet at the end of the Unit.

Application Problems

1. For the following circuit, calculate:
   A. The resistance of the serial portion,

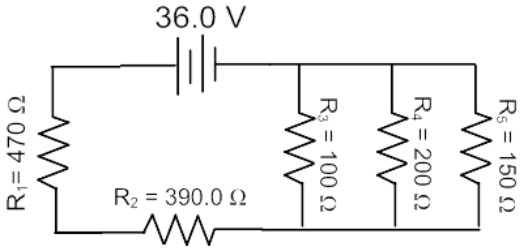

   B. The resistance of the parallel portion,

   C. the equivalent (total) resistance,

   D. the current through resistor 5,

   E. the total current,

   F. the power dissipated by resistor 2,

   G. the power dissipated by resistor 4,

   H. the total power dissipated.

2. For the following RC circuit, determine:
   A. The equivalent resistance of the circuit,

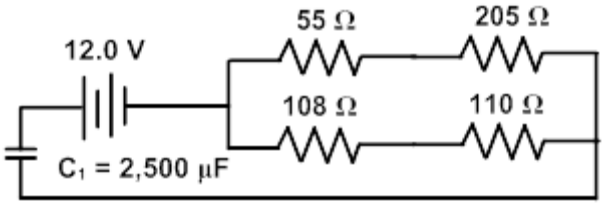

   B. the time constant of the circuit,

   C. the current flow at t = 2.5 seconds.

   D. the voltage across the capacitor at t = 2.5 seconds.

3. Consider two wires made from materials A and B. Wire A is three times the length of B; wire B has half of the cross sectional area as A; and the resistivity of A is one quarter that of B. What is the ratio of resistance between wires A and B?

AP Test Questions

1. Determine the equivalent resistance between points *a* and *b*.
   a) 0.25 Ω b) 0.333 Ω c) 1.5 Ω d) 2 Ω

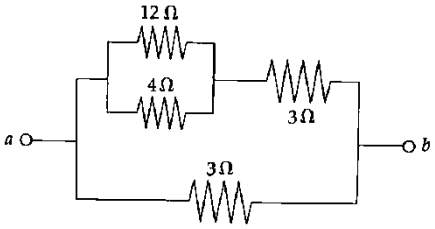

2. A battery whose EMF is 40 V has an internal resistance of 5 Ω. If this battery is connected to a 15 Ω resistor *R*, what will the voltage drop across *R* be?
   a) 10 V b) 30 V c) 40 V d) 50 V

3. Three identical light bulbs are connected to a source of emf, as shown in the diagram. What will happen if the middle bulb burns out?
   a) The intensity of the other bulbs will decrease (but they won't go out).
   b) The light intensity of the other two bulbs will increase.
   c) The light intensity of the other two bulbs will remain the same.
   d) More current will be drawn from the source of EMF.
   e) The remaining bulbs will go out.

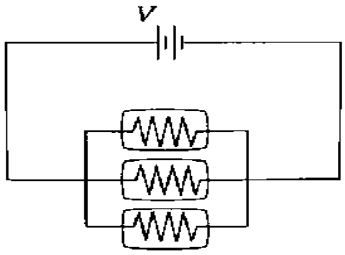

4. For an ohmic conductor, doubling voltage without changing resistance will cause the current to
   a) decrease by a factor of 4. b) decrease by t factor of 2.
   c) increase by a factor of 2. d) increase by a factor of 4.

5. What is the voltage drop across the 12 Ω resistor in the portion of the circuit shown?
   a) 24 V b) 36 V c) 48 V d) 72 V

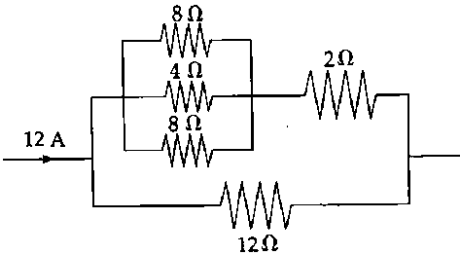

6. How much energy is dissipated as heat in 20 s by a 100 Ω resistor carrying 0.5 A?
   a) 50 J b) 100 J c) 250 J d) 500 J

7. What is the current through the 8 Ω resistor in the circuit shown?
   a) 0.5 A b) 1.0 A c) 1.5 A d) 3.0 A e) 4.76 A

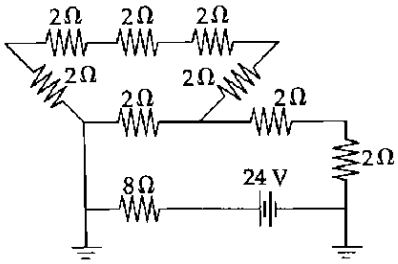

AP Physics 2		Unit 3.C Review - Current, Resistors, RC Circuits					
Points:	/ 24	Late or Incomplete Fee:	-2 -4 -6	Correction Credit:		Final Score:	

Solve these problems here, THEN enter your responses in the bubble sheet provided.

Each question is worth two points.

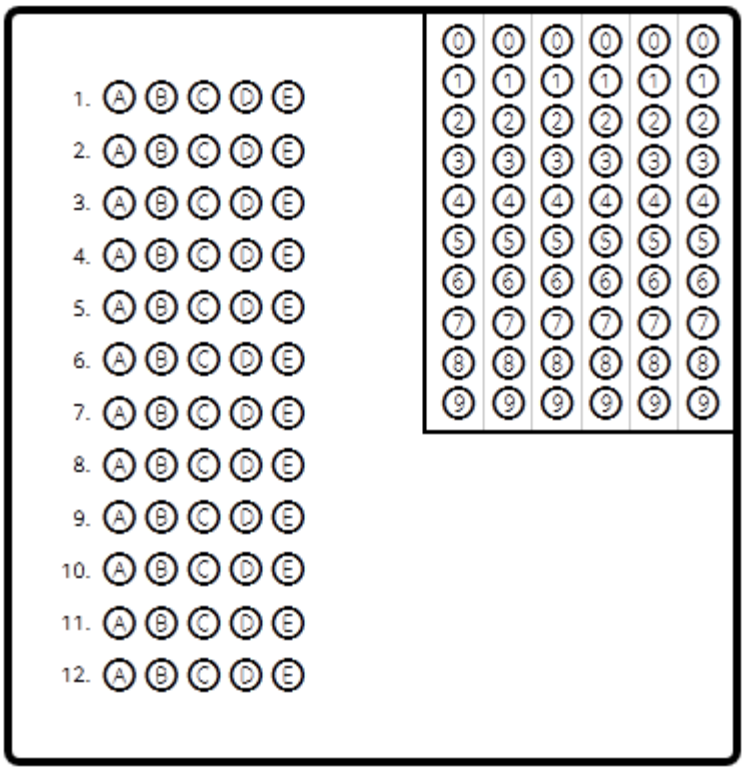

1. You have three batteries that measure 1.5 V individually. Which of the following is an impossible voltage when they are connected however you choose?

A. 1.5 V B. 3.0 V C. 4.5 V
D. 1.0 V E. 0.0 V

2. How long does 3.50 C of charge take to pass by a point on a wire with a current of 0.67 A?

A. 3.28 s B. 4.50 s C. 9.44 s
D. 6.14 s E. 5.22 s

3. How much current is drawn from a 12 V battery when a 8.0 Ω resistor is connected to it?

A. 180 A B. 0.8 A C. 90 A D. 1.5 A E. 2.0 A

4. A mystery material is formed into a 20 m long wire with a 0.282 cm radius. What is the resistivity of the material if a 100 V applied voltage produces a current of 5.0 A?

A. 1.2 E -5 Ω • m B. 2.5 E -5 Ω • m C. 3.8 E -5 Ω • m D. 8.9 E -5 Ω • m

5. How much power is dissipated in a circuit with a 52 V power source and a 15 Ω resistor?

A. 9.6 W B. 180 W C. 0.8 W D. 1.5 W E. 3.0 W

6. An electric water heater produces 27.8 kW of heat when connected to a 240 V power source. What is the current that it draws?

A. 4.8 A B. 116 A C. 120 A D. 208 A E. 150 A

7. An electric water heater produces 27.8 kW of heat when connected to a 240 V power source. What resistance does it have?

A. 1.15 Ω B. 0.86 Ω C. 2.07 Ω D. 3.16 Ω E. 1.5 Ω

For the following three questions, use the following circuit:

8. What is the total resistance of the circuit?

A. 17 Ω B. 12.5 Ω C. 16 Ω
D. 22 Ω E. 14.4 Ω

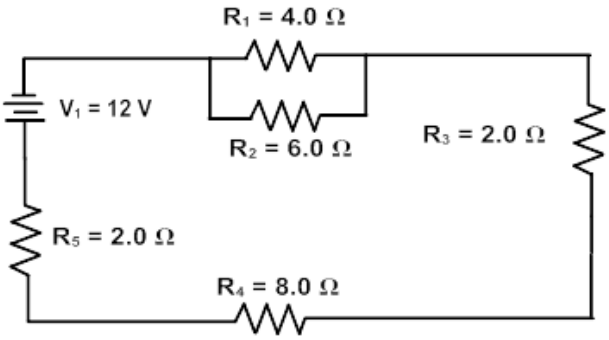

9. What is the current passing through R_3?

A. 0.71 A B. 1.0 A C. 0.83 A
D. 0.75 A E. 0.55 A

10. What is the power dissipated over R_4?

A. 1.4 W B. 3.2 W C. 2.7 W D. 1.0 W E. 5.5 W

Answer the following two questions using this circuit:

11. What is the time constant (τ) of the circuit?

A. 0.13 s B. 0.22 s C. 0.25 s
D. 0.33 s E. 0.41 s

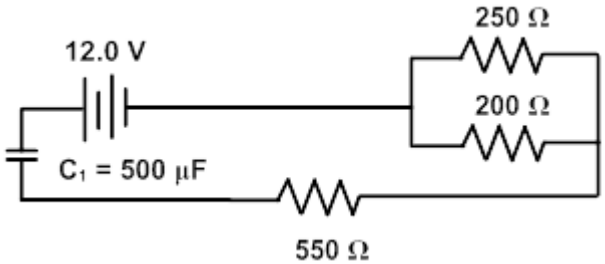

12. What current is passing through R_3? At t = 0.15 s?

A. 1.9 mA B. 2.7 mA C. 5.6 mA D. 8.5 mA E. 11.4 mA